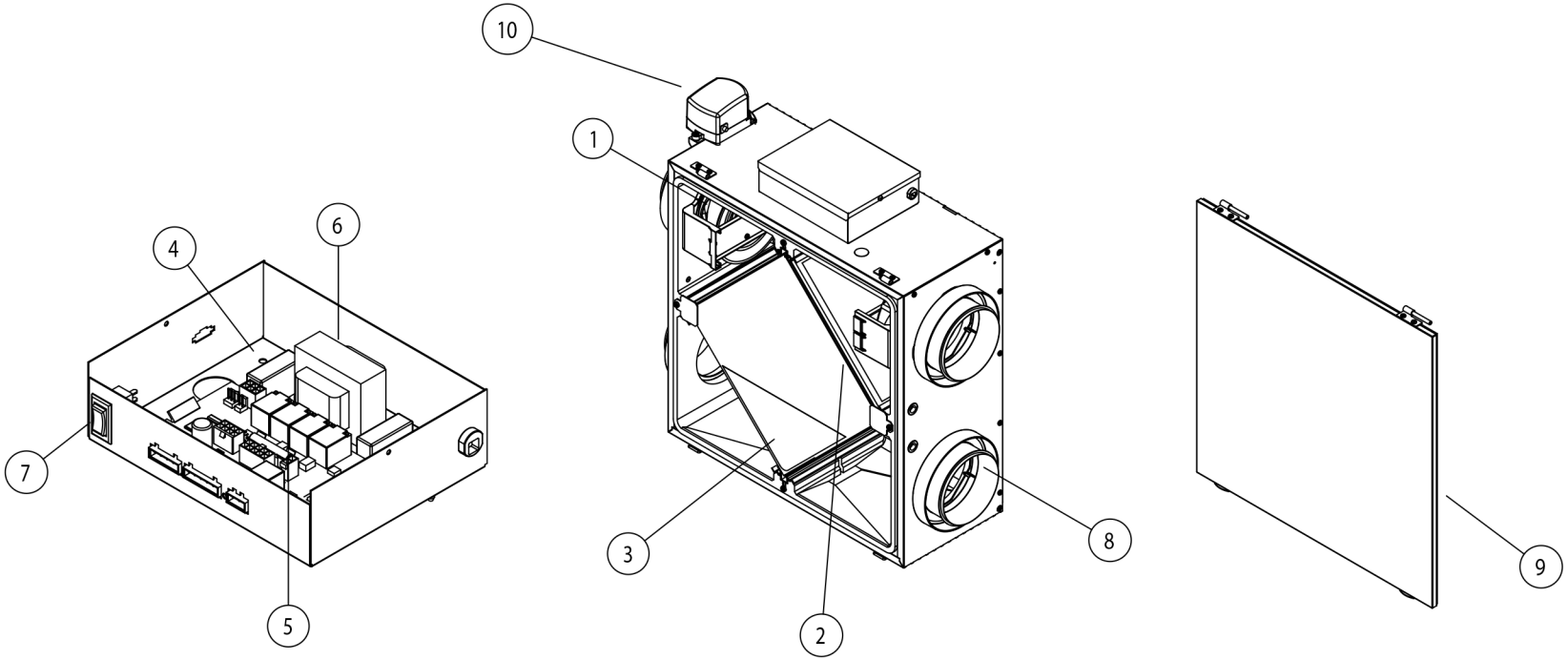
10
1
4
6
7
5
3
2
8
9

BOM#	Description	Fit 120E (463401)	Fit120E-D (463402)	Fit120E-D-EC (463404)	Fit 120E-HC (463409)	Fit120E-D-HC (463410)	Fit120E-D-EC HC (463411)
1	Replacement motor	448002	448002	448003	448002	448002	448003
2	Replacement MERV3 filters	448004	448004	448004	448004	448004	448004
3	Energy recovery core	448005	448005	448005	448005	448005	448005
4	Capacitor	450038	450038	N/A	450038	450038	N/A
5	PC board	428252	428252	428252	428252	428252	428252
6	Auto-transformer	411963	411963	411963	411963	411963	411963
7	Control switch	410213	410213	410213	410213	410213	410213
8	5” collar, round	414929	414929	414929	414929	414929	414929
9	Door assembly	448006	448006	448006	448006	448006	448006
10	Damper motor	N/A	448007	448007	N/A	448007	448007
	Temperature probe	40286	40286	40286	40286	40286	40286
	Chains	404261	404261	404261	404261	404261	404261
	MERV 8 filter (Pack of 2)	461674	461674	461674	461674	461674	461674
	MERV 13 filter (Pack of 2)	461675	461675	461675	461675	461675	461675